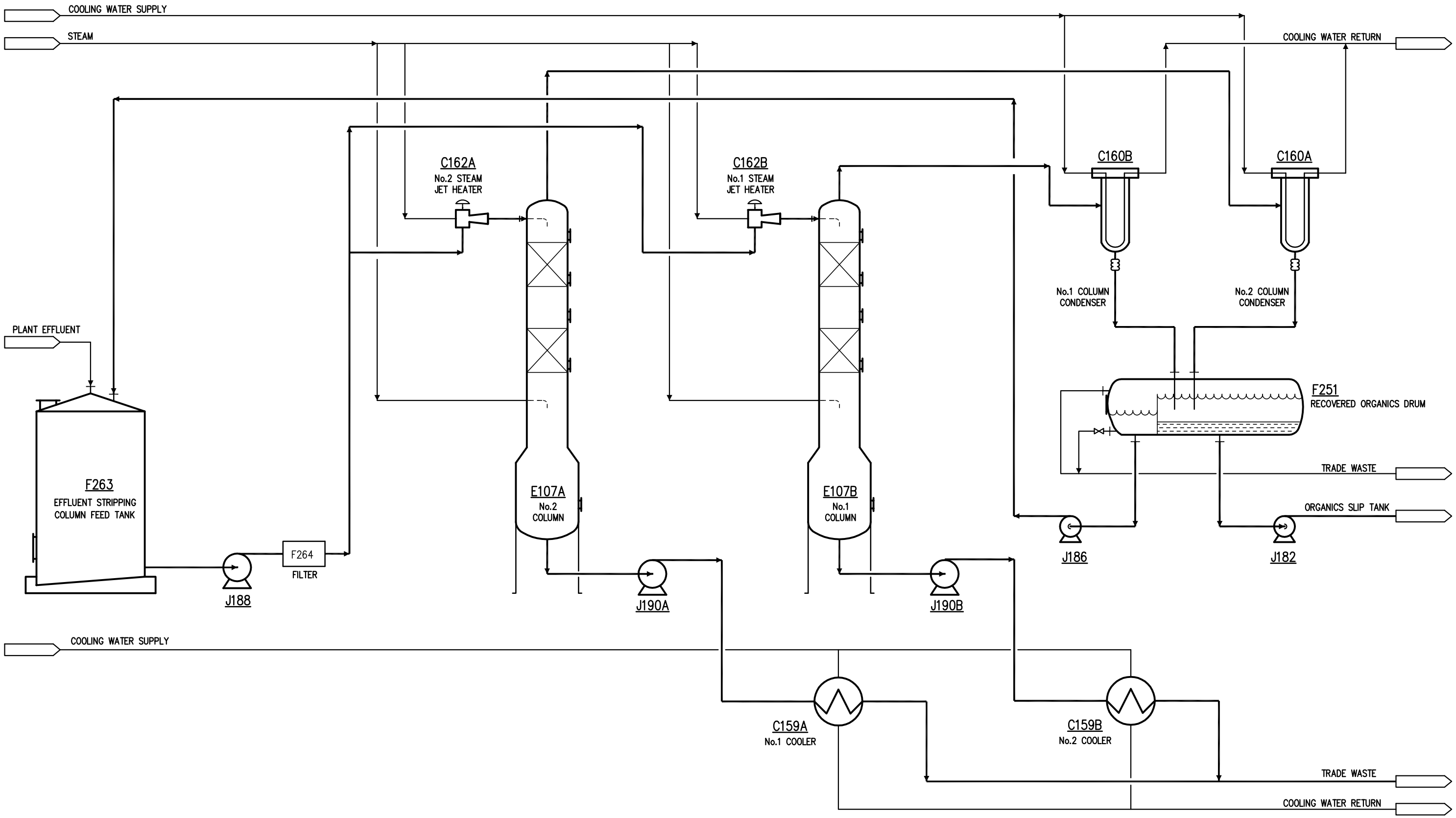

FIGURE 4.3

REV.	RES. No.	MOD. No.	REVISION DESCRIPTION	DRAWN	CHECKED	PASSED	APPROVED	DATE
A	-	-	-	-	-	-	-	-

REVISIONS AND APPROVALS

DRG. No.	DRG. TITLE
-	-

REFERENCE DRAWINGS

Kellogg Brown & Root Pty Ltd
KBR
Kellogg Brown & Root Pty Ltd ABN 91 007 668 317

THIS DRAWING AND DESIGN ARE THE PROPERTY OF
Orica Australia Pty. Ltd.
THE DRAWING OR DESIGNS MUST NOT BE REPRODUCED OR USED WITHOUT THE EXPRESS CONSENT OF ORICA.

DRAFTER	E.LISSER	10/03
DESIGNER	-	
DESIGN CHECKER	-	
DRAFTING CHECKER	-	
PROJECT DRAFTER	-	
DESIGN APPROVAL	-	
TECHNICAL APPROVAL	-	
PROJECT APPROVAL	-	
CLIENT APPROVAL	-	

WORKS: BOTANY
PLANT: -
SECTION: -
RES/PROJECT No.: -
SCALES: -

ORICA Australia Pty Ltd (ACN. 004 989 093)

TITLE
ORICA VINYLS PLANT
EFFLUENT STEAM STRIPPING UNIT
PROCESS FLOW DIAGRAM

PLANT	SEC	SUB	DRAWING No.	REV	
-	-	-	-	-	CAD DRAWING DO NOT MANUALLY REVISE THIS DRAWING

A1